INSTRUCTION PAMPHLET U-5013

DECEMBER, 1925

# MAINTENANCE

OF

# STYLE "B" A. C. AND D. C. SIGNALS

UNION SWITCH & SIGNAL CO.
SWISSVALE, PA.

Printed in U. S. A.

# UNION SWITCH & SIGNAL CO.

## SWISSVALE, PA.

## MAINTENANCE OF STYLE "B" A. C. AND D. C. SIGNALS

---

## SECTION I—D. C. SIGNALS

### 1. General:

All moving parts of the signal must, under all conditions of weather, move with perfect freedom. These parts should not be allowed to get tight through use of unsuitable oil or lack of lubrication.

Precaution should be observed to see that the semaphore spectacle castings rest against the stops provided for that purpose, allowing the slot arms and vertical connections to be free from all downward pressure when in the danger position.

Mechanisms are given a severe running test followed by a final inspection before shipment from the factory. Barring accidents in transit or installation, the signal mechanism should be found ready for satisfactory operation without further adjustment.

Before placing any signal in service, clean the bearings in the signal head at the top of the pole, removing all thick oil, and remove all oil, grease and dirt from armature and poles of slot magnet.

### 2. Lubrication:

Avoid using too much oil. Always remove all surplus.

Union Non-Freezing Lubricating Oil (Spec. 1093), or some other high grade light oil, free from acid, should be used for all lubrication.

Before placing signal in service, lubricate the bearings in the signal head at the top of the pole and in the mechanism, and fill the oil wells on the motor.

*Journals and bearings* should be oiled at least once a month.

*Motor Commutators* equipped with copper leaf brushes should be cleaned and then wiped with a cloth moistened with Spec. 1093 oil once a week. Commutators equipped with composition brushes should be kept free from oil at all times.

When *Circuit Controller* below slot arm is used bearings should be lubricated with 1093 oil. Contacts and other rubbing surfaces should be wiped with cloth moistened with 1093 oil once a week.

*Buffer cylinder* should be lubricated once a month by removing the plug containing the vent and dropping a little oil into the cylinder. The outside of the buffer should be wiped clean before the plug is removed, and special care taken that no dirt or grit enters the cylinder.

In the earlier types of this signal, the cylinder is lubricated by removing the vent screws and dropping oil in the vent while the signal is being cleared, the suction carrying the oil into the cylinder. Care should be observed here also that no dirt or grit enters the cylinder, and in replacing vent screw, care must also be taken that the buffing is properly adjusted.

### 3. Brushes:

Brushes of the composition type can be ground with fine sandpaper to an even seat on the commutator if uneven bearing surface is noted. Do not use emery for this.

Composition type brushes are installed in staggered positions with a slight overlap which results in a continuous bearing surface across the commutator and prevents the wearing of grooves in the commutator.

Earlier type brushes are built up of laminations of copper, beveled at the end for contact on the commutator. All brushes must work freely on studs and bear on commutator with a minimum of 2.0 oz. and a maximum of 4.0 oz. pressure per brush.

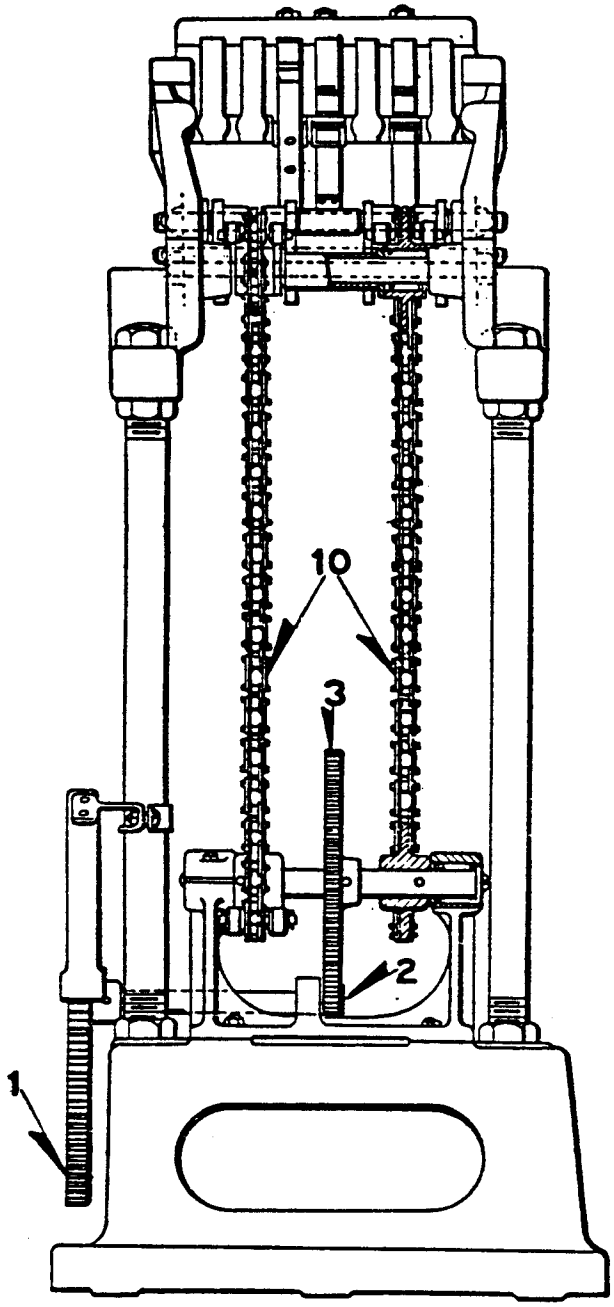


END VIEW of Fig. 1

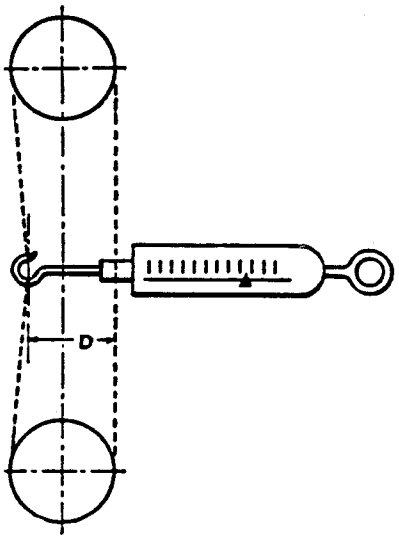


Fig. 2

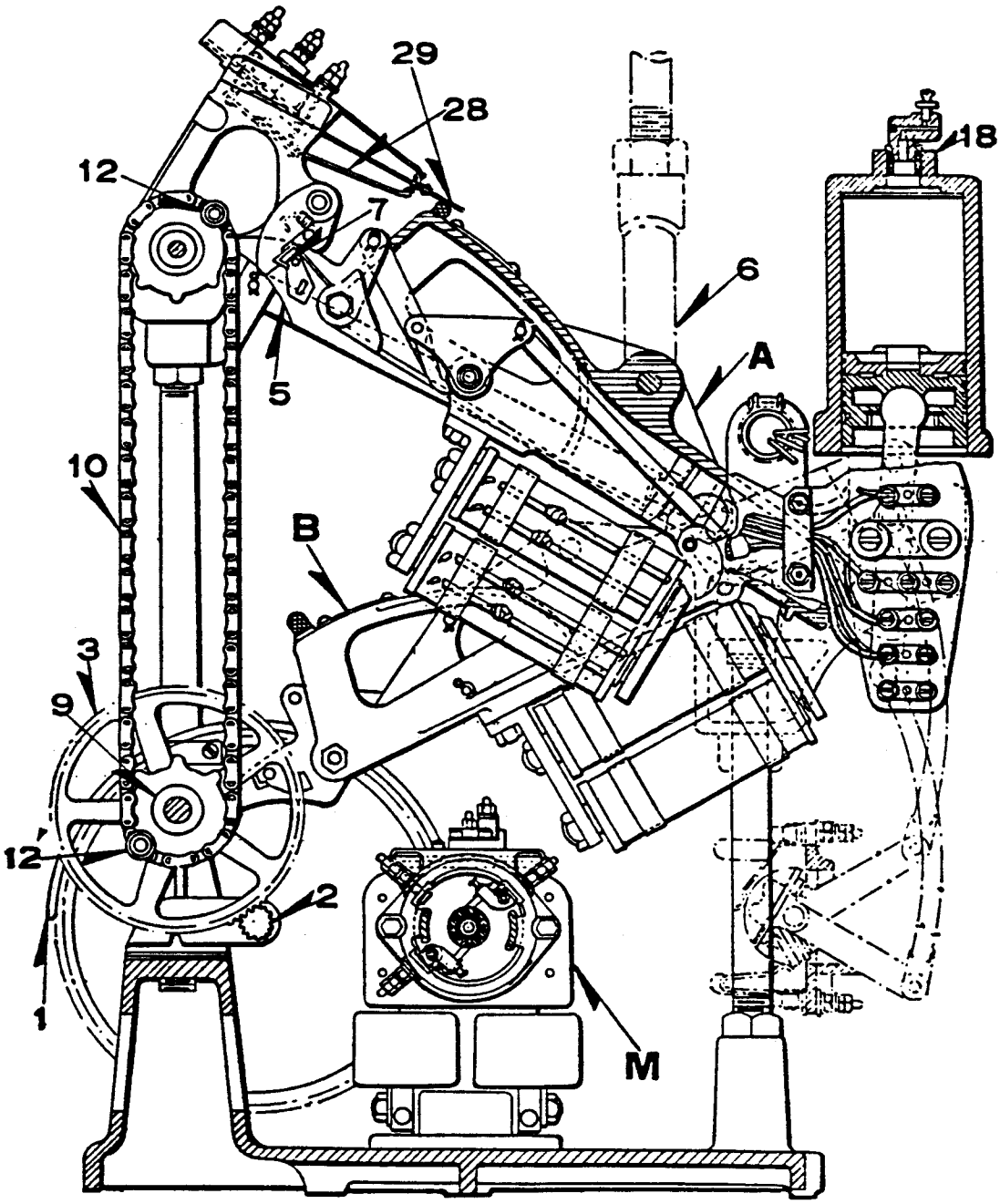


**FIG. 1**

**Central Vertical Section of Mechanism and Frame**

## 4. Driving Mechanism:

The Motor M, Fig. 1, by means of a pinion on its armature shaft, engages gear 1. On the same shaft with gear 1 is pinion 2, which engages with gear 3. Sprocket 9 is pinned to the same shaft as gear 3 and drives chain 10. On chain 10 are two sets of rollers 12 and 12′ which engage with the forked end 5 of the slot arm A or B. When the slot magnets are energized, the fork 5 is held rigid through a system of levers and toggle, and as the chain travels upward the slot arm is lifted, which in turn lifts the up-and-down rod 6 and moves the semaphore to the clear position.

When the chain has carried the slot arm to the clear position, contacts 28 and 29 are opened through engagement with the slot arm, and the battery to the motor is cut off. When the motor battery is cut off, a friction brake is applied to a wheel located at the rear end of the motor armature shaft, which stops the roller 12 shortly after it has passed out from under the lifting forks when motor is operated at 8 volts. This roller should not travel more than ½″ beyond top of sprocket when the signal is operated at 12 volts. Roller 12′ is then in position to engage the slot B for the distant signal or slot arm A after it has dropped down ready for the next operation.

When the roller 12 passes out from under the lifting fork of the slot arm, the slot arm drops down about $\frac{1}{16}$″ to ⅛″ until the lugs 7 rest on latch hooks provided for holding the slot arm in the clear position.

One motor and driving mechanism is used for all arms, with a separate lifting chain for each arm. For a three arm signal, there is one motor, three chains, and three slot arms, one for each signal blade. In some cases 2 motors are used for operation of a 4 arm mechanism.

Lifting chains shall not be allowed to become too loose. Factory adjustment is checked by using

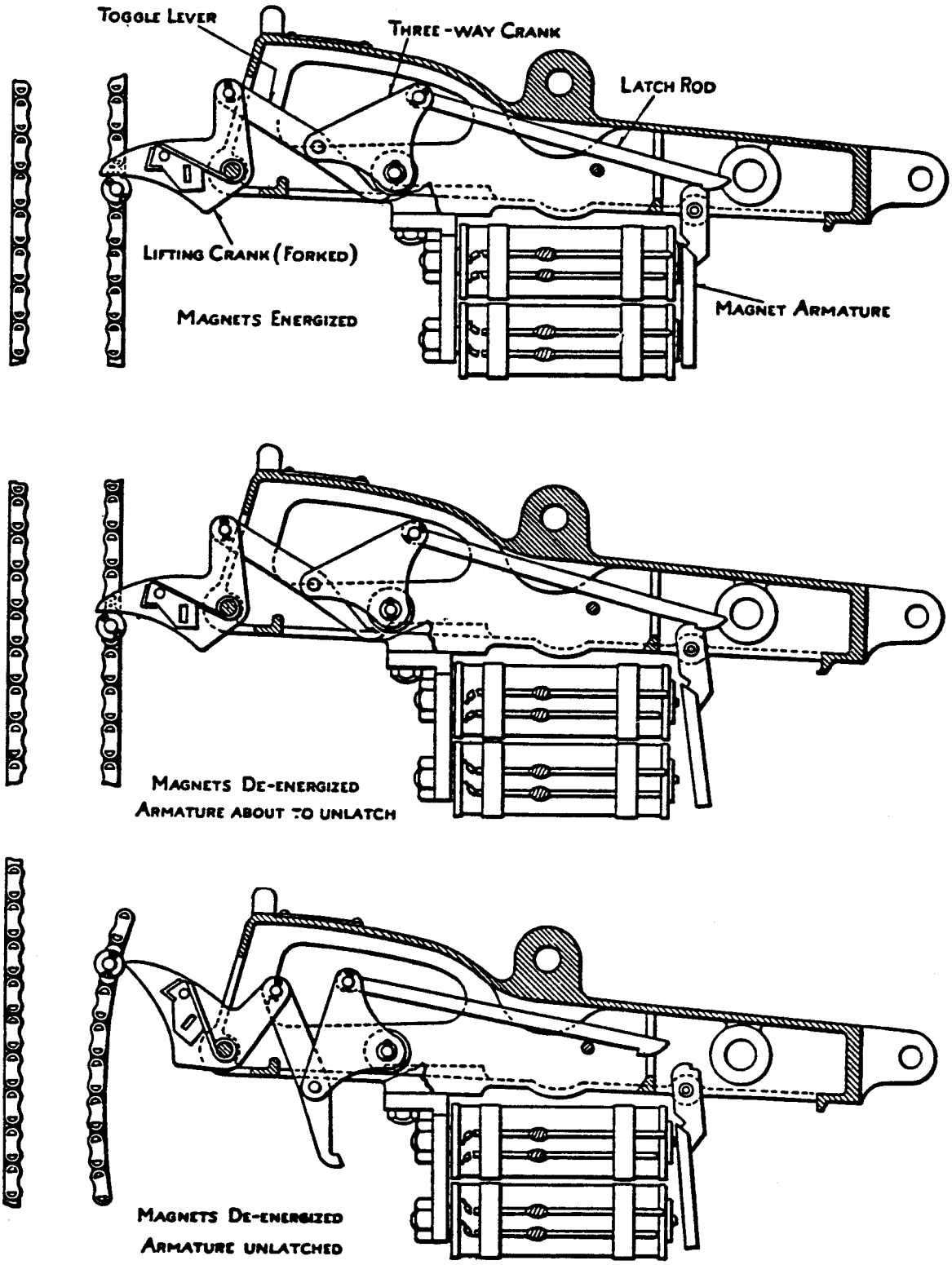


FIG. 3

Central Longitudinal section taken through Slot Arm, Showing its mechanism and the successive positions the latter assumes prior to, and at the moment of, releasing the signal mechanism.

a spring balance over the chain at a point midway between upper and lower shaft and with a pull of 5 lbs. as shown in Fig. 2, measuring the distance "D" between center lines. This distance is not less than $1\frac{7}{8}''$ or more than $2\frac{1}{16}''$.

About $\frac{1}{32}''$ end play may be expected in sprocket bearings.

5. Slot Arm:

The slot arm is that portion of the mechanism controlled directly by the track or line relay. It is shown as A and B, Fig. 1, and serves to engage the signal semaphore arm with the driving mechanism and holds said arm in the clear position until released, when the signal returns to danger by gravity.

The action of the slot arm and the manner in which its various parts function is shown in Fig. 3.

When in the clear position, both lugs of the slot fork shall rest evenly on the faces of the supporting pawl, insuring an even distribution of weight on the slot fork.

The coil spring on the slot fork should have a tension equal to one-quarter turn, to be determined by releasing spring and noting that released end takes a position at right angles to slot arm, and should restore the fork quickly to its normal position after slot arm has kicked off.

The springs on the supporting pawls should have ample strength to force the pawl sharply against the lugs on the slot fork.

The operation of the signal is very sensitive to the adjustment of the toggle, latch rod, armature, and magnet. In order to more clearly understand proper adjustment, Figs. 5 to 14 inclusive are shown. These views show correct and incorrect conditions and are self-explanatory.

Always keep armature and pole faces clean and free from oil or grease.

6. Toggle:

The length of the slot arm toggle is the distance

T in Fig. 13. This is always adjusted at the factory and the value stamped on link E, Fig. 13, such as 1, 3, or 5, meaning ¼", ⅜" or $\frac{5}{32}$" toggle, respectively. These parts should never be altered by filing the arm E or the brass stop B, as changes in the toggle produced thereby seriously affect the safety of the signal.

7. ARMATURE TRUNNIONS:

The clearance between the armature fulcrum pin and the bushing in the armature and the supporting trunnions is very small. Because of this, there is not more than $\frac{1}{32}$" side play at the lower end of the armature when signals are new. Excessive wear of these parts will distort the magnetic air gap and permit the upper stop pins to ride on the pole face when they should be free at all times.

When excessive wear is present, the release values of the slot arm will be erratic and renewals should be made of the worn parts.

8. BUFFER:

With exhaust port open, slot arm shall, of its own weight, without up-and-down rod connection settle freely from the clear to the danger position.

9. CIRCUIT BREAKER:

Contact finger adjustment should be such that they bear firmly and evenly on their respective segments and springs. All silver contact plates or fingers shall be firmly riveted and soldered in place.

The open contact springs with slot arm down, mounted above the sprocket shaft, should have a contact opening of from $\frac{3}{32}$" to ⅛" and should just close with the bottom of slot fork lugs at ½" below the faces of the supporting pawl.

The closed springs with slot arm down on this controller should have not less than $\frac{1}{16}$" contact opening when fork is resting on latch.

10. THREE-POSITION SIGNALS:

When style "B" mechanisms are used to operate

three-position signals, two slot arms are required, one for zero to 45 deg. and one for 45 deg. to 90 deg. operation. The up-and-down rod is provided at the lower end with a small rotating pinion meshing between two vertical toothed racks projecting upwards between guides from the slot arms. Each slot arm lifts a rack and when the front slot arm reaches the top of its stroke, its rack has carried the pinion to lift the up-and-down rod through half its total travel, thus bringing the semaphore to the 45 deg. or caution position. When the back slot arm lifts, it completes the upward stroke of the up-and-down rod so that the signal indicates 90 deg. or full proceed.

**11. Slot Magnets:**

The slot magnet on the front slot arm is usually wound to 500 ohms resistance and is slow acting so as to retain sufficient energization to keep the armature attracted during a change of polarity on polarized relays. The rear slot arm controlling the distant semaphore blade, or the 45 deg. to 90 deg. operation on three-position signals, does not have to take care of any open circuit period in polar relays when polarity changes and hence is usually 1000 ohms resistance and ordinary acting with a special motor winding to furnish extra power during the clearing operation.

When used at interlockings or for neutral line control, a slot contact is sometimes provided. This contact is actuated by the magnet armature so that the slot magnet must be energized to close the contact which supplies current to the motor.

**12. Circuits:**

Fig. 15 illustrates a typical circuit for the control of a two-arm two-position home and distant automatic signal or a one-arm three-position automatic signal.

Fig. 16 illustrates a typical circuit for interlocking or line control where the slot magnet functions

as a relay and operates a contact for the motor battery.

13. ELECTRICAL INSPECTION:

TEST:

Measure release voltage (shunt) periodically. Tabulate results in a form permitting of ready comparison. A gradual change in release voltage from one period to another indicates a changing condition of the signal. Use a standard voltage for all tests.

INTERVALS:

Electrical tests should be made every *six months* where signals operate under average conditions, Signals located in dense traffic zones should be given a test every *four months.*

APPARATUS:

(1) Tests should be made with an E. M. F. of 12 volts at the terminals of coils. Connect sufficient number of cells (dry cells may be used) in series with the signal battery to give approximately 14 volts on open circuit.
(2) Voltmeter with a scale reading 0-15 volts.
(3) Adjustable slide resistance for potentiometer connection.

METHOD:

(1) Comparative results can be obtained only by following exactly the same procedure in all tests.
(2) Remove slot coil leads from terminals and connect to testing circuit per diagram. Fig. 4.
(3) First drive signal to the position at which relase (shunt) is to be taken and then open circuit. This is to be done at least twice before taking readings so as to produce normal conditions.
(4) Adjust to 12 volts with switch "S" open, then close switch, clear the signal and correct voltage adjustment if necessary. Do not exceed 12 volts on slot coils after closing switch "S." If exceeded, release slot and repeat operation before

recording release value. An overcharge will lower release.

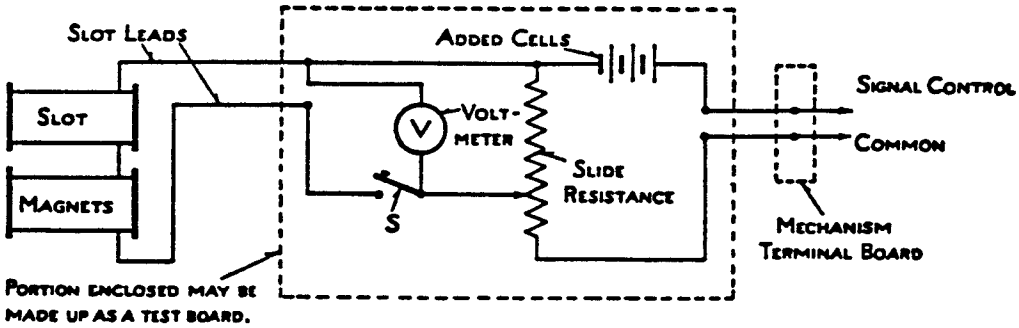


FIG. 4

(5) Before taking release, be sure that trunnions have passed from under lifting crank.
To obtain the release, reduce the voltage *slowly* by moving slide connection on the resistance unit until slot magnet releases.

Points to be Observed:

(1) The release voltages should be within values given below:

| | Slow Acting 500-Ohm - ¼" Toggle | | Ordinary Acting 1000 - Ohms ⅜" Toggle | |
|---|---|---|---|---|
| | Air Gap | Rel. Volts | Air Gap | Rel. Volts |
| Shop Test .... | .020 | 1.6-1.8 | .015 | 3.2-3.4 |
| Min. Service.. | .015 | 1.0 | .011 | 2.0 |

This data is for Style B Signals producing 120 lbs. thrust on slot arm.

(2) If the release voltage is less than the *Minimum Shop Values* specified in the tables above, the signal should be watched closely and adjustments made before the *Minimum Service Value* is reached.

(3) All slow acting slots of round pole face type should hold without tripping when the circuit is opened 0.6 second with energy at 8.0 volts. This is with slot arm in clear position. Under the same conditions, the slow acting slots having magnets with hexagon pole faces should hold 0.9 second.

(4) Signals releasing below minimum shop values in-

dicate either one or more of the following conditions:

(a) Excessive friction exists in moving parts such as the toggle, up-and-down rod, slot arm bearing, buffer, semaphore bearings or head gear bearings.

(b) Insufficient torque due to improper semaphore equipment.

(c) That the magnetic air gap has been decreased through wear of stop pins in armature.

Stop pins should not be allowed to wear beyond a point giving 0.004″ less air gap than marked on data plate of slot arm.

The air gap can be measured by leaf or a stop pin guage.

When stop pins need renewing, the slot arm should be sent to the shop for repairs and re-adjustment of air gap.

(5) If signals release at values higher than specified in the tables above, the safety factor is increased by that amount, but if they do not operate properly at the higher release values, this would indicate either one or more of the following:

(a) Excessive torque produced by improper semaphore equipment.

(b) Latch hook not seated to full depth in armature notch.

(c) Latch rod too long, allowing toggle to droop when latched.

(d) Latch hook or armature notch worn and not permitting of proper engagement.

(e) Toggle links and connection worn sufficient to increase the toggle.

(f) Stop pins longer than specified in data plate.

(g) Upper stop pins in armature engaging with pole face.

With lower pins engaging pole face, there should

be about .003″ clearance between upper pins and pole face. This means that the upper pins should always be .003″ shorter than the lower pins and the air gap adjusted to be parallel and the same across both pole faces.

Air gap should be as noted in preceding table.

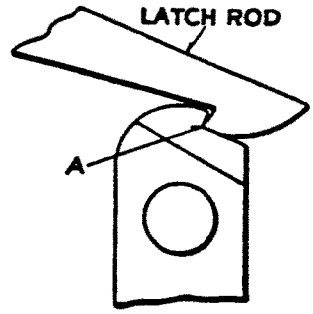


**FIG. 5**

**Correct adjustment of lever latch. Point of contact at "A" (bottom of notch).**

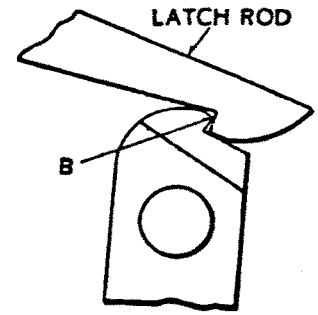


**FIG. 6**

**Incorrect adjustment of lever latch. Point of contact at "B" (top of notch) increasing pull on armature.**

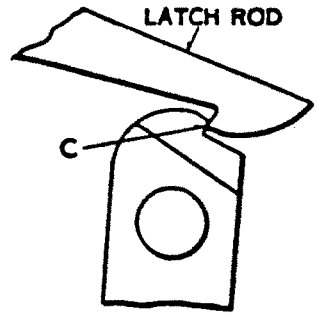


**FIG. 7**

**Lever latch not properly seated to full depth in armature notch. Point of contact at "C" increases leverage pulling armature away from pole pieces.**

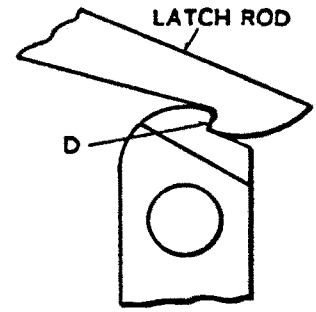


**FIG. 8**

**Wear of point of lever latch raises the point of contact, increasing leverage pulling armature away from pole pieces.**

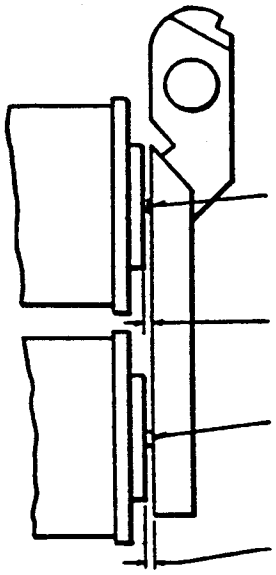


FIG. 9
CORRECT adjustment of air gap—Side View. Both magnets exactly in line.

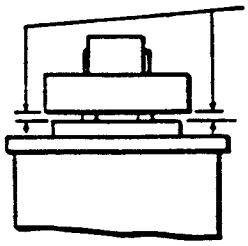


FIG. 10
CORRECT adjustment of air gap—End View. Both magnets exactly in line.

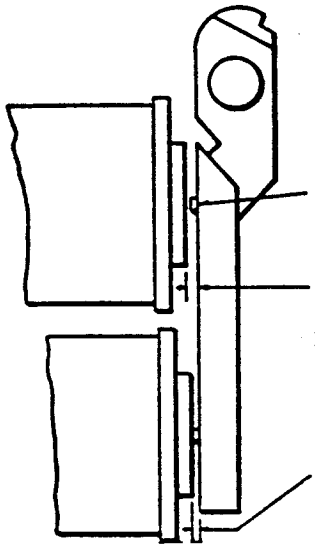


FIG. 11
INCORRECT air gap adjustment. Air gap distorted due to setting of magnets to make upper stop pins free when all four stop pins are the same length.

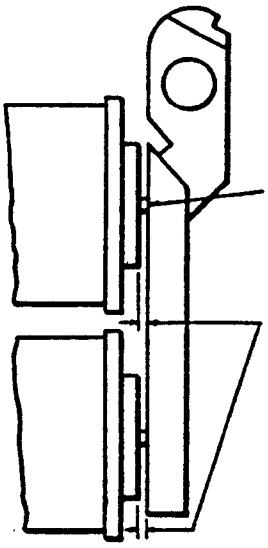


FIG. 12

INCORRECT air gap adjustment. All four stop pins same length and riding on pole faces.

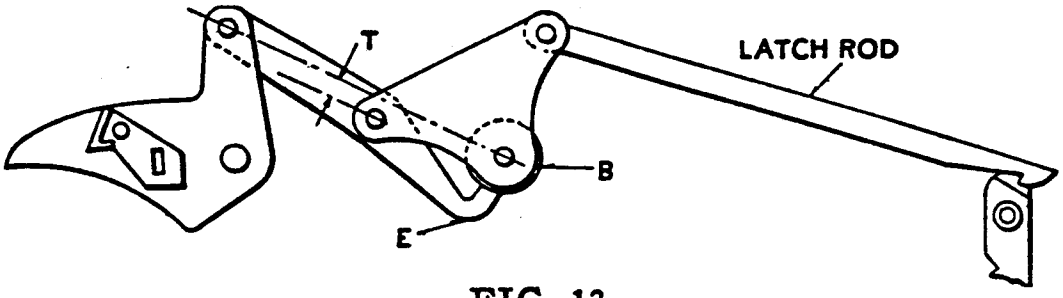


FIG. 13

Toggle is distance "T" measured when E is tight against brass stop B.

When signal is in clear position E should drop slightly away from B, but when E is pushed up tight against B, the latch rod should not move outwards more than $\frac{1}{64}$".

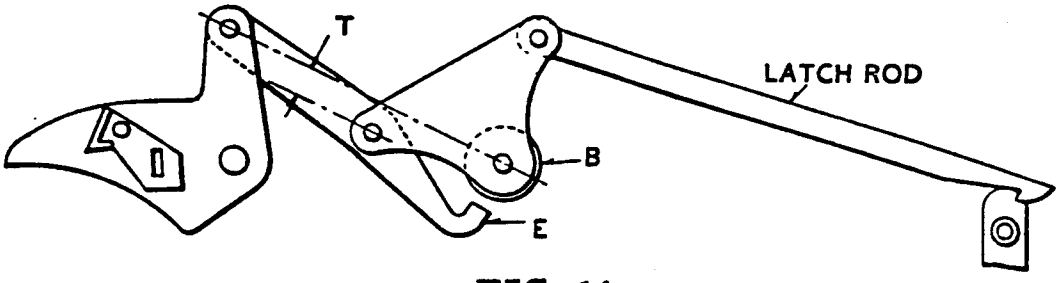


FIG. 14

Incorrect adjustment when signal is clear. Toggle is increased by drooping as shown and when pushed up against brass stop, the latch rod will move outwards more than $\frac{1}{64}$". Condition is due to wear of parts or to long latch rod and causes high release and kicking off.

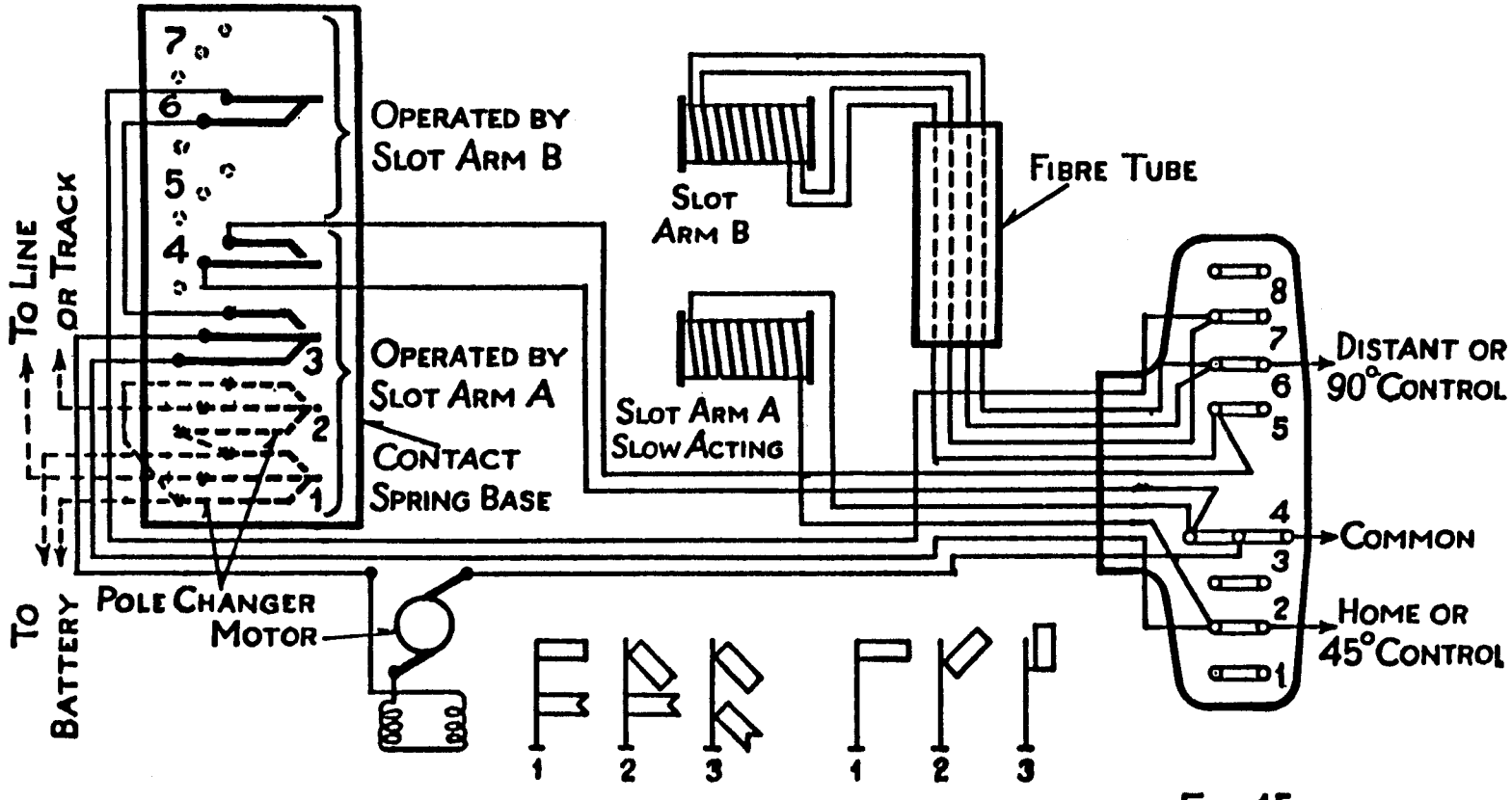


Fig. 15.

Aspect 1...A and B, De-energized.
Aspect 2...A Energized, B De-energized.
Aspect 3...A and B, Energized.

Wiring for D.C. Polarized System using Slow Acting Slot.
Reference B9962-53.

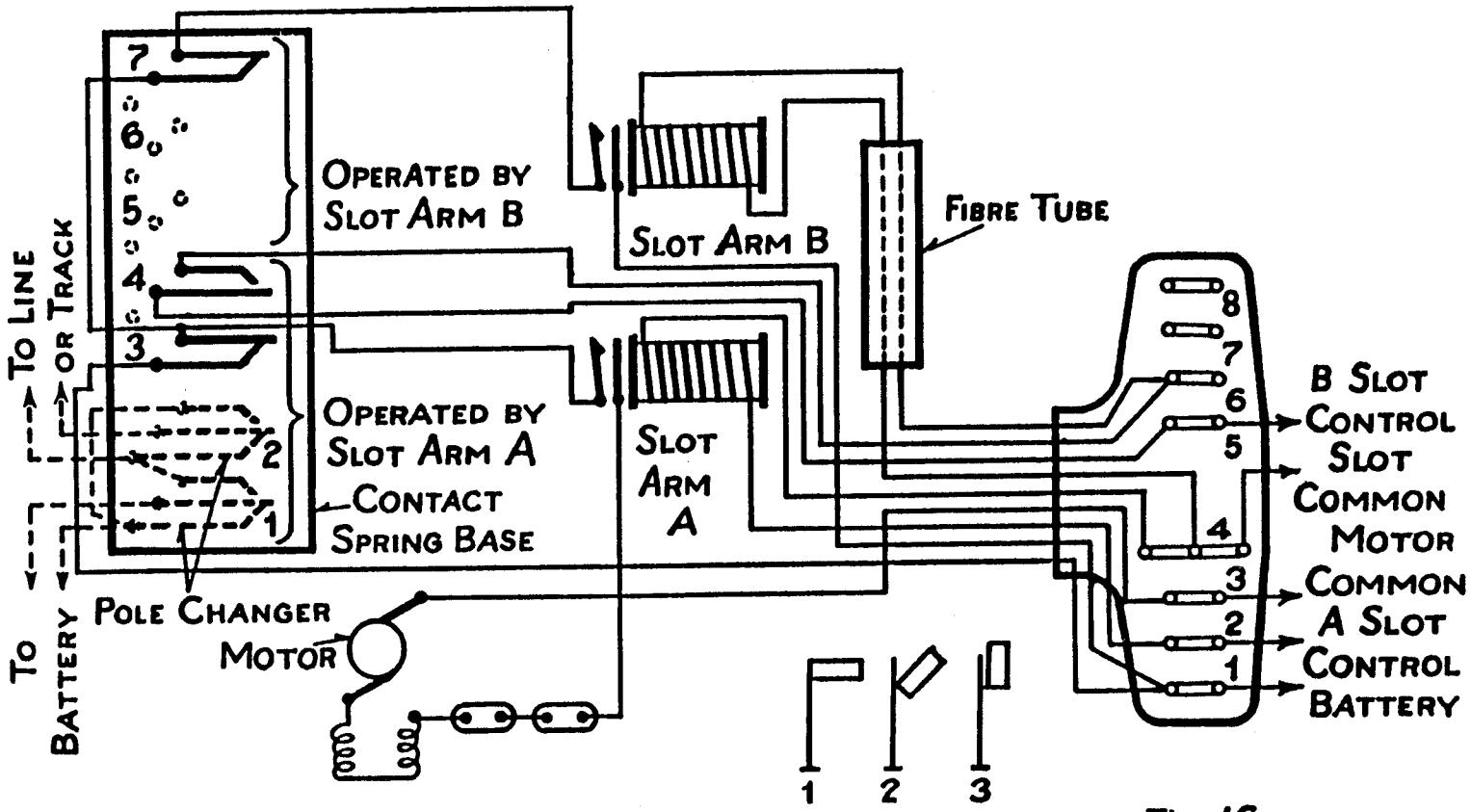


Fig. 16.

Aspect 1 -- A and B, De-energized.
Aspect 2 -- A Energized, B De-energized.
Aspect 3 - A and B, Energized.

Wiring for 1 Arm 3 Position Signal using Slot Contact for Motor Control. Reference B10996 -13.

## SECTION II—A.C. SIGNALS

### 1. General:

The same general precautions should be observed for A. C. signals as for D. C. signals. These points are outlined in Section I.

Any points not mentioned in the following description of the style "B" A. C. signal are covered by Section I.

### 2. Driving Mechanism:

The mechanism of the A. C. signal is essentially the same as for the D. C. signal. The general appearance is shown in Fig. 17.

### 3. Motor:

The A. C. Style "B" signals are driven either by induction motor of the squirrel cage rotor type or by an A. C. series motor. The brake coil of the single phase induction motor is connected in series with one of the motor windings and acts as an impedance to provide phase splitting. For the 2 phase motors two brake coils are connected in multiple, one with each motor winding.

The induction type motor does not require any special care except periodic oiling. The commutator of the A. C. series motor should receive the same attention as that of the D. C. motor as outlined in Section I.

### 4. Armature Trunnions

The bushing in the armature prevents excessive side play on the trunnion shaft. If the bushing becomes worn so that there is too much side play, the core pins may strike on the copper shading bands instead of on the pole face. This will make the air gap too large and will cause the tractive power of the slot magnet to be lowered below that necessary for proper operation of the signal.

### 5. Slot Magnets:

The slot magnet differs in a number of important

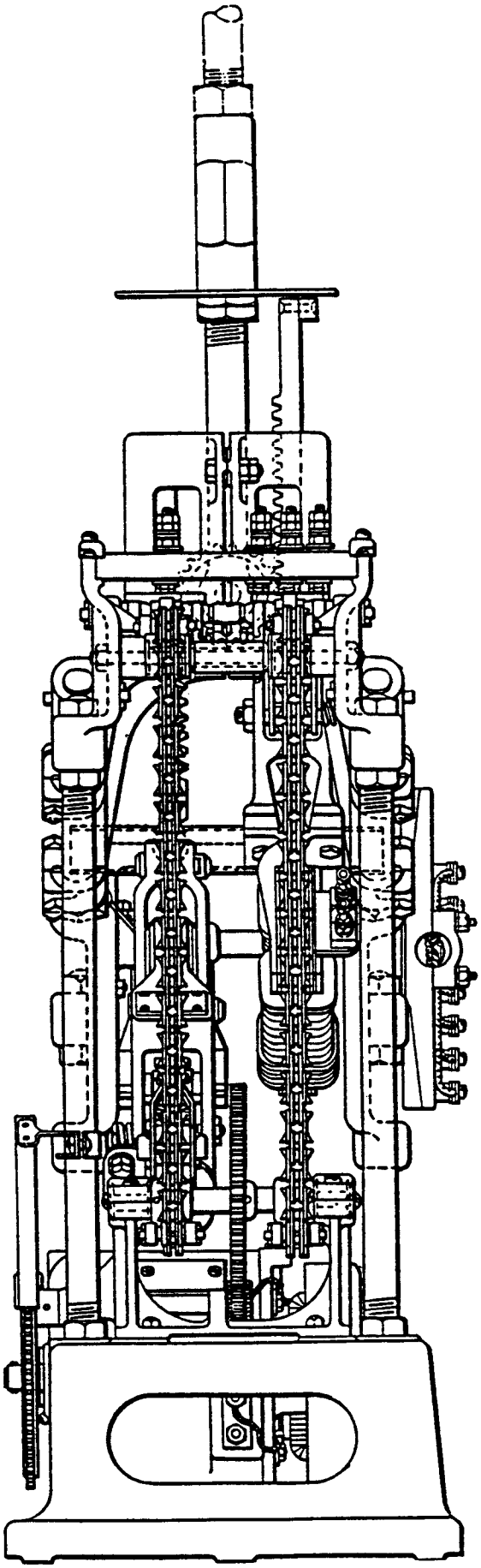

END VIEW of Fig. 17

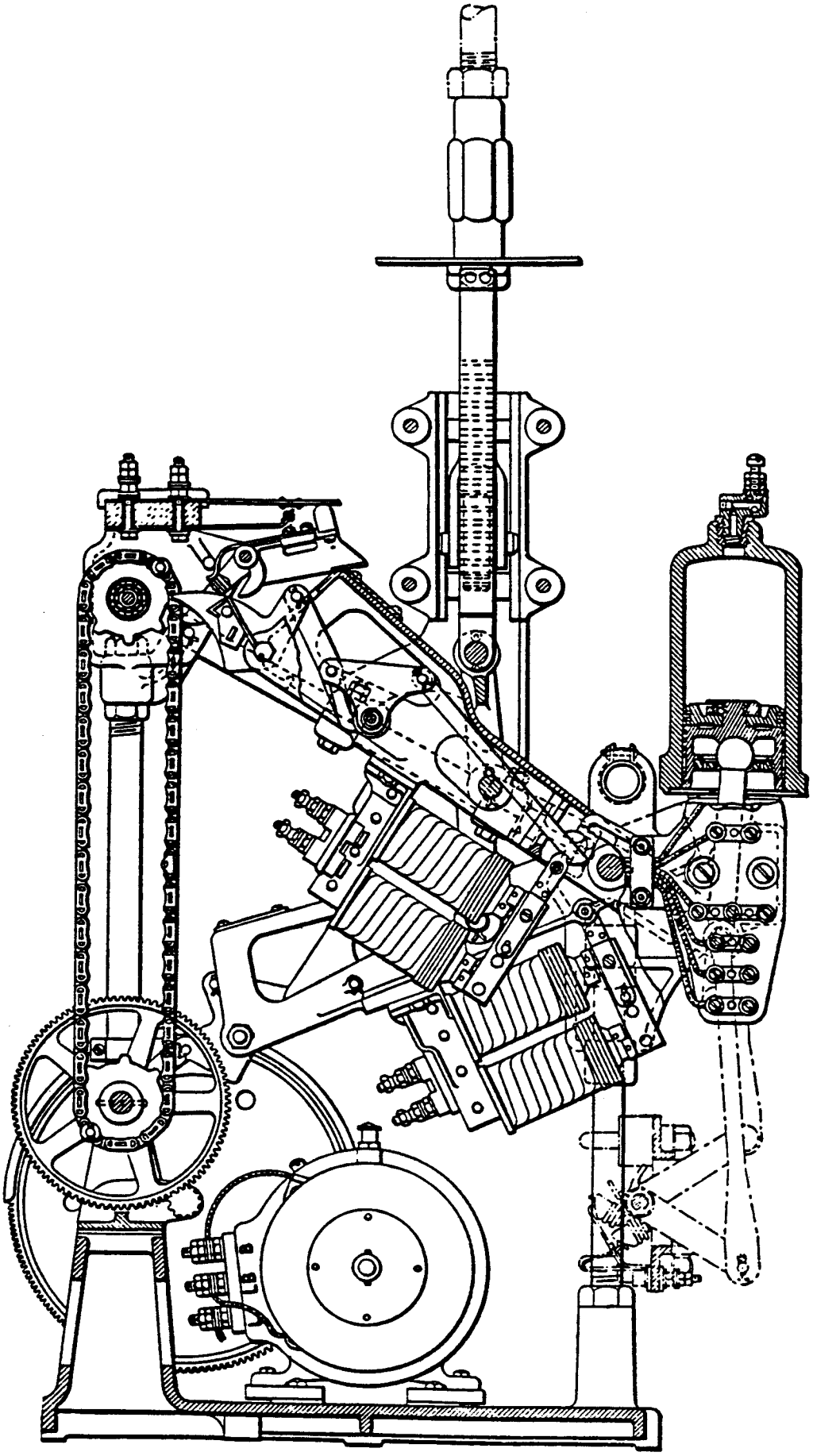

FIG. 17
Mechanism with Induction Motor for One Arm Three Position 90 Deg. Upper Quadrant Style "B" A. C. Signal

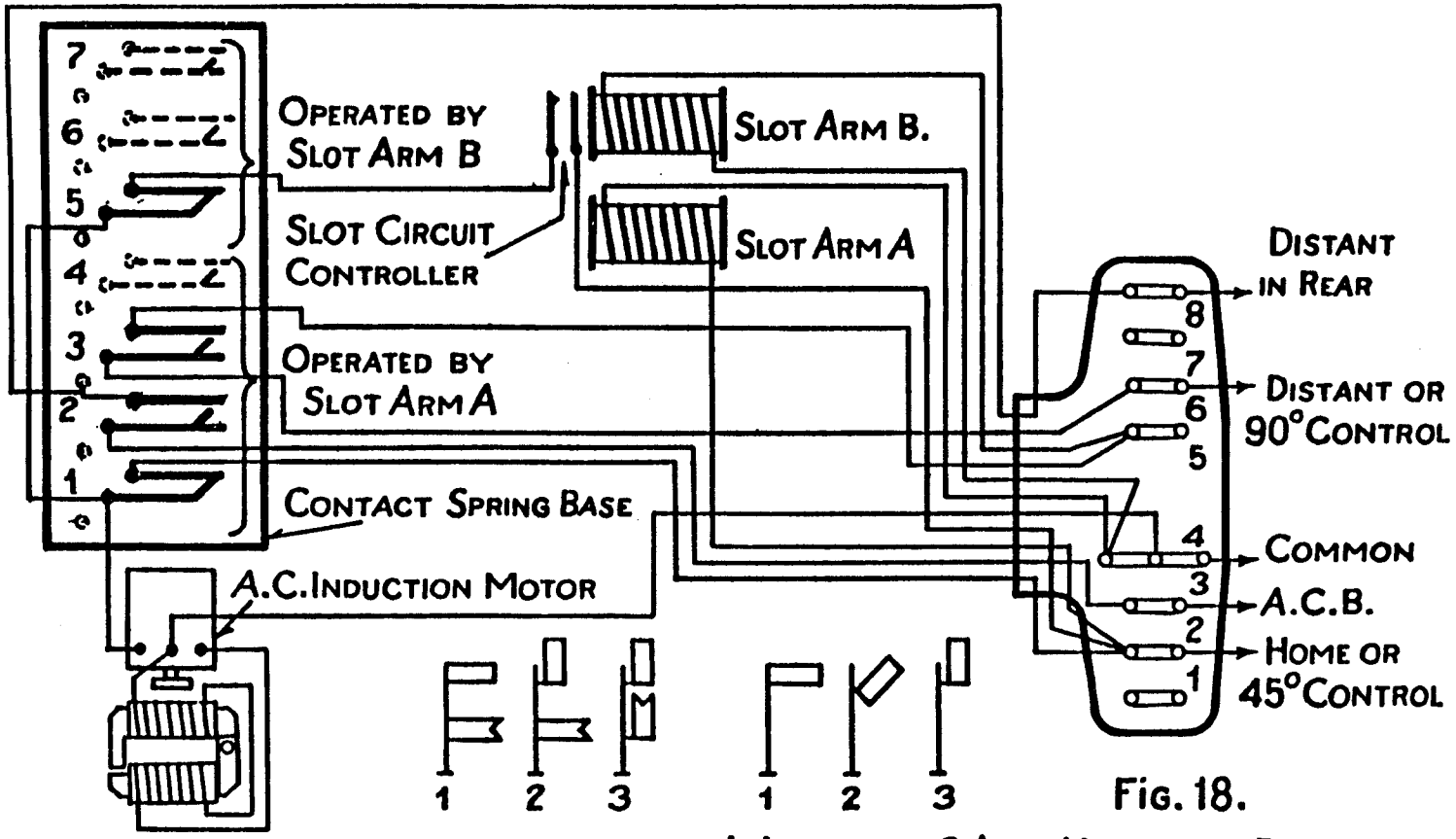


Fig. 18.

Wiring for 2 Arm Home and Distant or 1 Arm 3 Position Signal using Slot Contact for Local Motor Control.

Aspect 1.. A and B De-energized.
Aspect 2. A Energized, B De-energized.
Aspect 3. A and B, Energized.

Reference B 10303 -16.

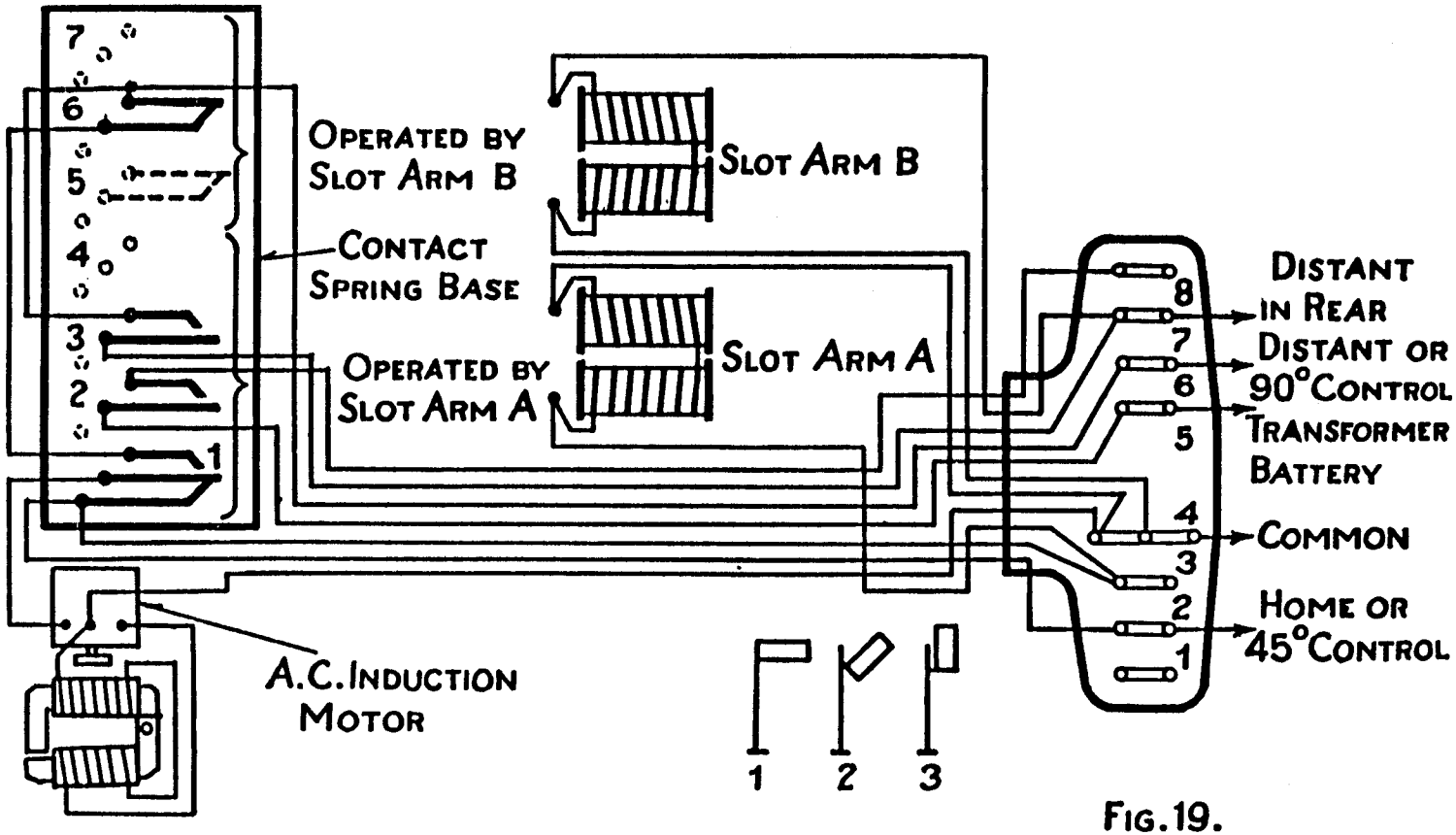


Fig. 19.

Aspect 1.. A and B De-energized.
Aspect 2.. A Energized, B De-energized.
Aspect 3. A and B, Energized.

Wiring for 1 Arm 3 Position Signal using A.C. Induction Motor.

Reference B10303 –

details from that of the D. C. signal. The magnetic circuit consists of U shaped laminations of transformer steel which are riveted together and to a bracket at the closed end of the U. The coils are slipped over the legs of the magnet and are held in place by pins passing through the outer ends of the legs close to the head of the coil.

To provide for a continuous flow of flux from the core to the armature, heavy copper shading bands are placed in the pole faces so as to surround approximately one-half of the area. These bands or ferrules cause the flux passing through them to lag the main flux in the unshaded part. The result, is then, that when the flux in the unshaded part of the pole face is zero at the time when it reverses, there is still a certain amount of flux flowing in the shaded part of the pole face. Chattering of the armature is thereby prevented.

The armature of the A. C. slot magnet is not rigidly connected to the bracket. A certain amount of play is provided so that the armature may be seated firmly against the pole faces under all conditions. This is necessary to insure that there is no chattering. Chattering of the armature will, in time, hammer down the core pins and thus take away the protection against residual magnetism which the core pins give.

Core pins for A. C. slot magnets are made either .020″ or .025″ long depending on the voltage and frequency for which the magnets are wound. All four core pins should bear on the pole faces of the magnet when the magnet is energized. The armature should not ride on the projecting part of the shading bands nor should the core pins strike the shading bands. In either case the armature position should be readjusted, or, if necessary, a new armature should be installed to get the correct adjustment. The shading bands should project 0.015″ beyond the pole faces.

Unlike the D. C. slot magnets, the A. C. mag-

nets can not be made slow acting. It is therefore necessary when three position style "B" A. C. signals are used to provide a slow acting relay which will keep energy on the 45 degree slot arm during the open circuit period which occurs when the three position track relay is being reversed.

6. CIRCUITS:

Typical circuits for A. C. signals are shown in Figs. 18 and 19.

7. ELECTRICAL INSPECTION:

Periodic tests should be made of the release values of the slot magnets. The results should be tabulated so that comparison may be made to determine whether or not the condition of the signal is changing.

The release of A. C. slot magnets should not be allowed to drop below 40% of the normal rated voltage.

The circuit for testing release of slot magnets is shown in Fig. 20.

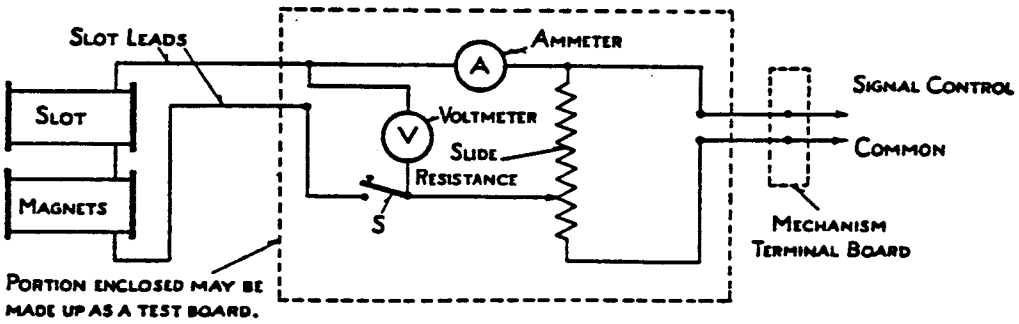


FIG. 20

The apparatus required for these tests is as follows:

1—90 ohm adjustable resistance slide, 2 Amp. Capacity (U. S. &. S. Co. Dwg. 65525-B9954, Sh. 7)

1—A. C. Ammeter 0-1.0 Ampere.

1—A. C. Voltmeter 0-150 and 0-75 volt scales.

It should be noted that the armature will hold in the clear position of the signal, without humming or chattering on 80% of the normal operating voltage. Any tendency to chatter indicates improper adjustment and the cause should be located and removed.

Chattering may be caused by:—

(a) Upper corepins not resting on the poleface. This may be corrected by moving the magnet toward the armature.

(b) The two corepins on one side of the armature not touching the poleface. The magnet should be twisted sideways until all four corepins rest on the poleface.

(c) Core pins resting on copper shading bands. The magnet should be adjusted until the corepins clear the shading bands and rest on the polefaces.

(d) Improper toggle adjustment in the slot arm. Proceed as described in Section I for adjusting the toggle under "Points to be observed" 5a, 5b, 5c, 5d and 5e.

If the release of the signal is less than 40% of the rated normal voltage it may be due to any one or a combination of the conditions outlined in Section I, page 10, "Points to be observed" paragraph 4.

# MEMORANDA